CORE VALUES | QUALITY PRODUCTS | SUPERIOR SERVICE

CORE® LIFTING PRODUCTS

THIMBLES

Crosby®

GP Green Pin®

IMPORTED

CoreLifting.com

G-411

- Hot-dip galvanized steel.
- The standard choice for light duty loading conditions and applications.
- Meets the performance requirements of Federal Specification FF-T-276C Type II, except for those provisions required of the contractor.

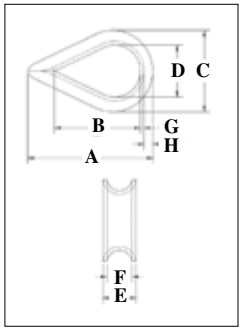

Standard Wire Rope Thimbles

Rope Diameter (in)	Rope Diameter (mm)	Stock No	Weight Per 100 (lb)	Dimensions (in) A	B	C	D	E	F	G	H
1/8	3-4	1037256	3.50	1.94	1.31	1.06	.69	.25	.16	.05	.13
3/16	5	1037274	3.50	1.94	1.31	1.06	.69	.31	.22	.05	.13
1/4	6-7	1037292	3.50	1.94	1.31	1.06	.69	.38	.28	.05	.13
5/16	8	1037318	4.00	2.13	1.50	1.25	.81	.44	.34	.05	.13
3/8	9-10	1037336	6.70	2.38	1.63	1.47	.94	.53	.41	.06	.16
1/2	11-13	1037354	12.50	2.75	1.88	1.75	1.13	.69	.53	.08	.19
5/8	16	1037372	34.50	3.50	2.25	2.38	1.38	.91	.66	.13	.34
3/4	18-20	1037390	47.10	3.75	2.50	2.69	1.63	1.08	.78	.14	.34
7/8	22	1037416	84.60	5.00	3.50	3.19	1.88	1.27	.94	.16	.44
1	24-26	1037434	97.50	5.69	4.25	3.75	2.50	1.39	1.06	.16	.41
1-1/8 - 1-1/4	28-32	1037452	175.00	6.25	4.50	4.31	2.75	1.75	1.31	.22	.50

G-408

- Hot-dip galvanized steel.
- Recommended for light duty applications where assembly into another fitting (i.e., shackle or master link) is required.

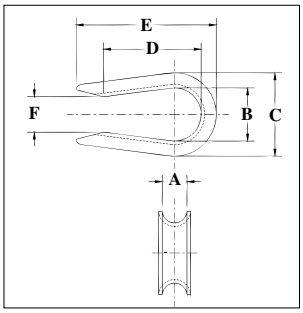

Open Pattern Thimbles

Rope Diameter (in)	Rope Diameter (mm)	Stock No	Weight Per 100 (lb)	Dimensions (in) A	B	C	D	E	F
1/4	6-7	1037531	3.00	.28	.69	1.06	1.41	2.03	.38
5/16	8	1037559	3.80	.34	.81	1.25	1.53	2.16	.50
3/8	9-10	1037577	7.00	.44	.94	1.47	1.72	2.47	.62
1/2	11-13	1037595	12.50	.53	1.12	1.75	1.97	2.84	.75
5/8	16	1037611	25.00	.66	1.38	2.38	2.34	3.59	1.00

S-412

- Cast ductile iron.
- Fits pin for open wire rope socket, boom pendant clevis, and wedge socket.

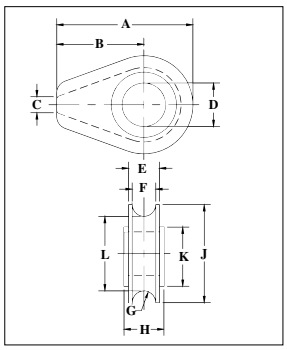

Solid Wire Rope Thimbles

Rope Diameter (in)	Rope Diameter (mm)	Stock No	Weight Per 100 (lb)	Dimensions (in) A	B	C	D	E	F	G	H	J	K	L
1/2	13	1037121	.61	2.81	1.75	.25	1.06	.75	.56	.28	.88	2.13	1.63	1.56
5/8	16	1037149	2.21	4.69	3.00	.38	1.31	1.06	.81	.41	1.13	3.38	2.25	2.56
3/4	18-20	1037167	2.32	4.69	3.00	.38	1.50	1.06	.81	.41	1.38	3.38	2.25	2.56
7/8	22	1037185	5.45	6.06	3.81	.50	1.75	1.38	1.06	.53	1.63	4.50	3.25	3.44
1	24-26	1037201	5.25	6.06	3.81	.50	2.13	1.38	1.06	.53	1.81	4.50	3.25	3.44
1-1/8	28-30	1037229	9.29	7.25	4.56	.63	2.38	1.75	1.31	.66	2.06	5.38	3.88	4.06
1-1/4 - 1-3/8	32-35	1037247	9.81	7.25	4.56	.63	2.63	1.94	1.53	.78	2.31	5.38	3.88	4.13

© 2025 Kito Crosby. All Rights Reserved.

Crosby

G-414

- Available in hot-dip galvanized or stainless steel (Type 304).
- Stainless steel recommended for more corrosive environments where greater protection is required.
- Greater protection against wear and deformation of the wire rope eye.
- Longer service life.
- Meets the performance requirements of Federal Specification FF-T-276C Type III, except for those provisions required of the contractor.

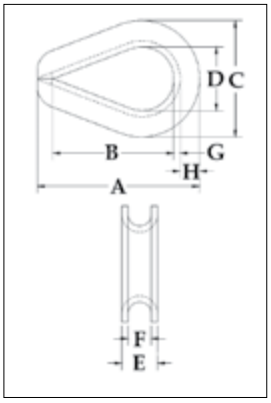

Extra Heavy Wire Rope Thimbles

Rope Diameter		G-414 Stock No	Weight Per 100 (lb)	Dimensions (in)							
(in)	(mm)			A	B	C	D	E	F	G	H
1/4	6-7	1037639	7	2.19	1.62	1.50	.88	.41	.28	.06	.25
5/16	8	1037657	14	2.50	1.88	1.81	1.06	.50	.34	.08	.30
3/8	9-10	1037675	23	2.88	2.12	2.12	1.12	.63	.41	.11	.39
7/16	11-12	1037693	37	3.25	2.38	2.38	1.25	.72	.47	.12	.45
1/2 - 9/16	13-15	1037719	50	3.62	2.75	2.75	1.50	.89	.59	.15	.48
5/8	16	1037755	82	4.25	3.25	3.12	1.75	1.00	.66	.16	.53
3/4	18-20	1037773	157	5.00	3.75	3.81	2.00	1.22	.78	.22	.69
7/8	22	1037791	190	5.50	4.25	4.25	2.25	1.38	.94	.22	.78
1	24-26	1037817	280	6.12	4.50	4.75	2.50	1.56	1.06	.25	.88
1-1/8 - 1-1/4	28-32	1037835	-	7.00	5.12	5.88	2.88	1.88	1.31	.25	1.25
1-1/4 - 1-3/8	32-35	1037853	830	9.08	6.50	6.81	3.50	2.25	1.44	.37	1.29
1-3/8 - 1-1/2	35-38	1037871	1250	9.00	6.25	7.12	3.50	2.62	1.56	.50	1.31
1-5/8	40	1037899	-	11.25	8.00	8.12	4.00	3.00	1.72	.50	1.38
1-3/4	44	1037915	1860	12.19	9.00	8.50	4.50	3.06	1.84	.50	1.50
1-7/8 - 2	48-52	1037933	2780	15.12	12.00	10.38	6.00	3.38	2.09	.50	1.69
2-1/4	56	1037951	-	17.50	14.00	11.88	7.00	3.88	2.38	.62	1.82

G-414 SL

- Prevents the shackle from being removed and replaced in the field, which could compromise the certified integrity of the sling assembly.
- Available in hot-dip galvanized. Crosby's shackle locking thimbles are galvanized after the welding of the wedge has been completed.
- Greater protection against wear and deformation of the wire rope eye.
- Longer service life.
- Meets the performance requirements of Federal Specification FF-T-276C Type III, except for those provisions required of the contractor.

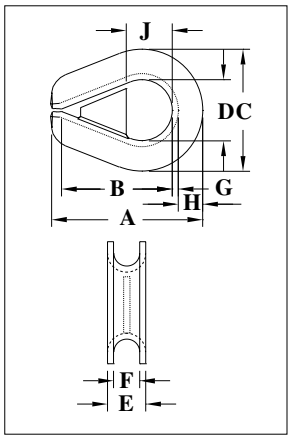

Extra Heavy Wire Rope Thimbles (Shackle-Loc)

Rope Diameter		Stock No	Weight Per 100 (lb)	Dimensions (in)								
(in)	(mm)			A	B	C	D	E	F	G	H	J
3/8	9-10	1036800	24	2.88	2.12	2.12	1.12	.63	.41	.11	.39	.81
1/2 - 9/16	13-15	1036808	55	3.62	2.75	2.75	1.50	.89	.59	.15	.48	1.12
5/8	16	1036817	82	4.25	3.25	3.12	1.75	1.00	.66	.16	.53	1.25
3/4	18-20	1036826	161	5.00	3.75	3.81	2.00	1.22	.78	.22	.69	1.50
7/8	22	1036835	206	5.50	4.25	4.25	2.25	1.38	.94	.22	.78	1.63
1	24-26	1036844	300	6.12	4.50	4.75	2.50	1.56	1.06	.25	.88	1.88
1-1/8 - 1-1/4	28-32	1036853	425	7.00	5.12	5.88	2.88	1.88	1.31	.25	1.25	2.13
1-3/8 - 1-1/2	35-38	1036862	1317	9.00	6.25	7.12	3.50	2.62	1.56	.50	1.31	2.50

© 2025 Kito Crosby. All Rights Reserved.

C

Thimbles

Standard commercial

- **Material:** mild steel
- **Finish:** electro-galvanized
- **Certification:** 2.1 CE IIB

E-6110

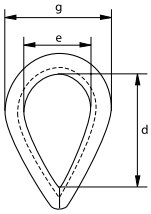

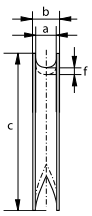

diameter rope	width groove	width overall	length	length inside	width inside	thickness back	width	weight per 100 pcs
inch	a inch	b inch	c inch	d inch	e inch	f inch	g inch	lbs
5/32	5/32	9/32	31/32	5/8	7/16	3/32	3/4	1.1
3/16	3/16	5/16	1 7/32	7/8	5/8	1/8	31/32	1.76
1/4	1/4	13/32	1 15/32	1 1/32	3/4	1/8	1 3/16	3.09
5/16	5/16	15/32	2	1 11/32	15/16	3/16	1 1/2	6.17
11/32	11/32	1/2	2 1/4	1 1/2	1 5/32	7/32	1 23/32	6.61
13/32	13/32	5/8	2 17/32	1 21/32	1 1/4	7/32	1 15/16	10.58
15/32	15/32	23/32	3	2	1 1/2	1/4	2 1/4	17.64
9/16	9/16	25/32	3 7/32	2 1/4	1 9/16	5/16	2 7/16	22
5/8	5/8	7/8	3 1/2	2 3/8	1 21/32	11/32	2 19/32	33.1
23/32	23/32	1 1/32	4 1/32	2 5/8	1 25/32	13/32	2 7/8	48.5
25/32	25/32	1 3/32	4 17/32	3	2	7/16	3 3/16	55
7/8	7/8	1 3/16	5	3 9/32	2 1/8	1/2	3 7/16	71
15/16	15/16	1 1/4	5 7/16	3 17/32	2 17/32	9/16	3 15/16	101
1 1/32	1 1/32	1 13/32	5 31/32	4 1/32	2 11/16	9/16	4 7/32	146
1 3/32	1 3/32	1 1/2	6 1/2	4 11/32	2 7/8	5/8	4 17/32	170
1 3/16	1 3/16	1 21/32	7	4 23/32	3 1/8	21/32	4 29/32	176
1 1/4	1 1/4	1 23/32	8	5 5/8	3 21/32	23/32	5 9/16	287

C

Thimbles

Heavy duty stub-end

- **Material:** mild steel
- **Finish:** hot dipped galvanized
- **Certification:** 2.1 CE IIB

G-6120

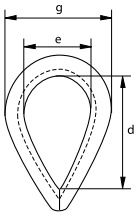

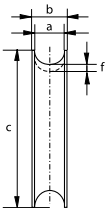

diameter rope	width groove	width overall	length	length inside	width inside	thickness back	width	weight per 100 pcs
inch	a inch	b inch	c inch	d inch	e inch	f inch	g inch	lbs
5/16	11/32	1/2	2	1 3/8	7/8	5/32	1 23/32	1.1
13/32	7/16	19/32	2 17/32	1 27/32	1 3/16	5/32	2 1/8	1.76
15/32	1/2	23/32	3	2 1/4	1 3/8	3/16	2 7/16	3.09
9/16	19/32	13/16	3 1/2	2 9/16	1 25/32	1/4	3	6.17
5/8	23/32	7/8	4 1/32	2 15/16	1 31/32	1/4	3 9/32	6.61
23/32	25/32	1 3/32	4 1/2	3 11/32	2 3/32	9/32	3 19/32	10.58
25/32	7/8	1 3/16	5	3 11/16	2 3/8	5/16	4 1/32	17.64
7/8	15/16	1 7/32	5 1/2	4 7/32	2 9/16	11/32	4 11/32	22
15/16	1 1/32	1 11/32	5 31/32	4 1/2	2 3/4	3/8	4 21/32	33.1
1 3/32	1 3/16	1 17/32	7	5 1/8	3 5/32	13/32	5 9/32	48.5
1 1/4	1 11/32	1 5/8	8	6 3/16	3 15/16	13/32	6 3/8	55
1 13/32	1 1/2	1 7/8	9 1/32	6 7/8	4 17/32	7/16	7 5/32	71
1 9/16	1 21/32	2	10	7 25/32	4 23/32	15/32	7 13/32	101
1 23/32	1 13/16	2 7/16	11 1/32	8 7/16	5 1/8	9/16	8 9/32	146
1 31/32	2 3/32	2 9/16	12	8 21/32	5 1/2	23/32	9 3/4	170
2 7/32	2 1/4	2 11/16	14 1/32	9 21/32	5 29/32	29/32	10 5/16	176
2 17/32	2 5/8	3 11/32	16 1/32	11 1/4	7 9/32	25/32	11 1/32	287

C

Thimbles

Heavy duty stub-end reinforced with welded fillet plate

- **Material:** mild steel
- **Finish:** hot dipped galvanized reinforced with a welded fillet plate
- **Certification:** 2.1 CE IIB

G-6128

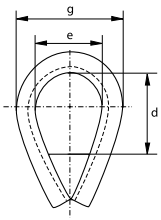

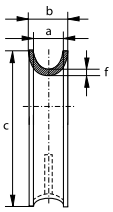

width groove	width overall	length	length inside	width inside	thickness back	width	weight per piece
a inch	b inch	c inch	d inch	e inch	f inch	g inch	lbs
1 3/8	2 5/32	8 21/32	3 15/16	3 5/32	13/32	5 29/32	7.05
1 9/16	2 9/16	9 21/32	4 23/32	3 17/32	15/32	6 5/16	11.24
1 31/32	3 5/32	11 13/32	4 29/32	4 11/32	5/8	7 7/8	20.3
2 7/16	3 15/16	14 3/16	6 5/16	5 1/2	25/32	9 27/32	38.4
2 27/32	4 17/32	15 11/32	6 7/8	6 5/16	25/32	10 7/16	42.8
3 11/32	4 29/32	18 1/2	9 21/32	7 15/32	25/32	11 13/16	64
3 15/16	5 29/32	21 1/4	11 13/32	7 7/8	31/32	14 9/16	86
4 17/32	6 1/2	22 7/16	11 13/16	8 9/32	31/32	14 31/32	115

For shackle

group	width groove a inch								
		1 3/8	1 9/16	1 31/32	2 7/16	2 27/32	3 11/32	3 15/16	4 17/32
G-4161	Working Load Limit WLL t	17, 25	25	35, 42.5	55	85			
G-4163		17, 25	25	35, 42.5	55	85			
G-4151		17, 25	25	35, 42.5	55	85			
G-4153		17, 25	25	35, 42.5	55	85			
P-6036							120, 150	150, 200	
G-6038							120, 150	150, 200	
P-6033		30	30	40, 55	75	125	125		
G-5263		30, 40	40		85	120	150, 175	175	
G-5163		17, 25	25	35, 42.5	55	85			
P-6031							120, 150	150, 200	
G-4263		4.75 ~ 25	6.5 ~ 25	9.5 ~ 30	16 ~ 55	25 ~ 75	30 ~ 75	55, 75	75
P-5363		17, 25	25	35, 42.5	55	85			
P-5365		17, 25	25	35, 42.5	55	85	120, 150	150, 200	
P-5367		17, 25	25	35, 42.5	55	85	120, 150	150	
G-4164		17, 25	25						
G-4154		17, 25	25						
G-4169		17							
G-4159		17							

C

Thimbles

According to DIN 3091

S-6134

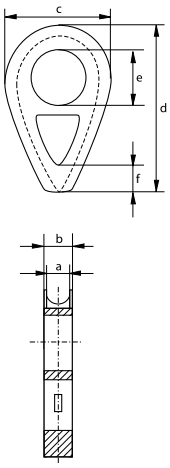

- **Material:** cast mild steel, (GTW 40)
- **Standard:** according to DIN 3091
- **Finish:** self-coloured
- **Certification:** 2.1 CE IIB
- **Note:** the diameter (e) of the timble for diameter wire rope 2 $^{27}/_{32}$ inch is 5 $^{1}/_{2}$ inch

diameter rope	width groove	width overall	width	length	diameter	length	weight per 100 pcs
inch	a inch	b inch	c inch	d inch	e inch	f inch	lbs
$^{5}/_{16}$	$^{11}/_{32}$	$^{19}/_{32}$	1 $^{9}/_{16}$	2 $^{7}/_{32}$	$^{9}/_{16}$	-	39.7
$^{13}/_{32}$	$^{7}/_{16}$	$^{11}/_{16}$	1 $^{31}/_{32}$	2 $^{3}/_{4}$	$^{23}/_{32}$	-	71
$^{15}/_{32}$	$^{1}/_{2}$	$^{25}/_{32}$	2 $^{3}/_{8}$	3 $^{5}/_{16}$	$^{13}/_{16}$	-	115
$^{9}/_{16}$	$^{5}/_{8}$	$^{15}/_{16}$	2 $^{3}/_{4}$	3 $^{27}/_{32}$	$^{31}/_{32}$	-	176
$^{5}/_{8}$	$^{23}/_{32}$	1 $^{1}/_{32}$	3 $^{5}/_{32}$	5 $^{1}/_{8}$	1 $^{3}/_{32}$	$^{5}/_{8}$	198
$^{23}/_{32}$	$^{25}/_{32}$	1 $^{1}/_{8}$	3 $^{17}/_{32}$	5 $^{23}/_{32}$	1 $^{7}/_{32}$	$^{23}/_{32}$	267
$^{25}/_{32}$	$^{7}/_{8}$	1 $^{7}/_{32}$	3 $^{15}/_{16}$	6 $^{11}/_{32}$	1 $^{3}/_{8}$	$^{25}/_{32}$	355
$^{7}/_{8}$	$^{15}/_{16}$	1 $^{5}/_{16}$	4 $^{11}/_{32}$	6 $^{31}/_{32}$	1 $^{1}/_{2}$	$^{7}/_{8}$	465
$^{15}/_{16}$	1 $^{1}/_{32}$	1 $^{13}/_{32}$	4 $^{23}/_{32}$	7 $^{19}/_{32}$	1 $^{5}/_{8}$	$^{15}/_{16}$	597
1 $^{1}/_{32}$	1 $^{5}/_{32}$	1 $^{9}/_{16}$	5 $^{1}/_{8}$	8 $^{7}/_{32}$	1 $^{23}/_{32}$	1 $^{1}/_{32}$	783
1 $^{3}/_{32}$	1 $^{7}/_{32}$	1 $^{21}/_{32}$	5 $^{1}/_{2}$	8 $^{13}/_{16}$	1 $^{27}/_{32}$	1 $^{3}/_{32}$	926
1 $^{1}/_{4}$	1 $^{3}/_{8}$	1 $^{27}/_{32}$	6 $^{5}/_{16}$	10 $^{3}/_{32}$	2 $^{3}/_{32}$	1 $^{1}/_{4}$	1389
1 $^{13}/_{32}$	1 $^{9}/_{16}$	2 $^{3}/_{32}$	7 $^{3}/_{32}$	11 $^{11}/_{32}$	2 $^{5}/_{16}$	1 $^{13}/_{32}$	1949
1 $^{9}/_{16}$	1 $^{23}/_{32}$	2 $^{9}/_{32}$	7 $^{7}/_{8}$	12 $^{19}/_{32}$	2 $^{9}/_{16}$	1 $^{9}/_{16}$	2425
1 $^{23}/_{32}$	1 $^{7}/_{8}$	2 $^{15}/_{32}$	8 $^{21}/_{32}$	13 $^{27}/_{32}$	2 $^{3}/_{4}$	1 $^{23}/_{32}$	3307
1 $^{7}/_{8}$	2 $^{3}/_{32}$	2 $^{23}/_{32}$	9 $^{7}/_{16}$	15 $^{1}/_{8}$	3	1 $^{7}/_{8}$	4409
2 $^{1}/_{16}$	2 $^{1}/_{4}$	2 $^{29}/_{32}$	10 $^{1}/_{4}$	16 $^{3}/_{8}$	3 $^{3}/_{16}$	2 $^{1}/_{16}$	5512
2 $^{7}/_{32}$	2 $^{7}/_{16}$	3 $^{5}/_{32}$	11 $^{1}/_{32}$	17 $^{5}/_{8}$	3 $^{3}/_{8}$	2 $^{7}/_{32}$	7055
2 $^{17}/_{32}$	2 $^{3}/_{4}$	3 $^{17}/_{32}$	12 $^{19}/_{32}$	20 $^{5}/_{32}$	3 $^{3}/_{4}$	2 $^{17}/_{32}$	10141
2 $^{27}/_{32}$	3 $^{1}/_{8}$	3 $^{31}/_{32}$	14 $^{3}/_{16}$	22 $^{11}/_{16}$	5 $^{1}/_{2}$	2 $^{27}/_{32}$	14551

C

Thimbles

Generally to US Fed. Spec. FF-T-276b type III

- **Material:** mild steel
- **Standard:** generally to US Federal Specification FF-T-276b type III and generally to EN 13411-1
- **Finish:** hot dipped galvanized
- **Certification:** 2.1 CE IIB

G-6142

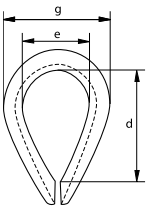

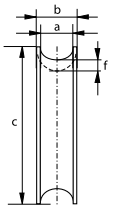

diameter rope	width groove	width overall	length	length inside	width inside	thickness back	width	weight per 100 pcs
inch	a inch	b inch	c inch	d inch	e inch	f inch	g inch	lbs
1/4	9/32	13/32	2 7/32	1 5/8	7/8	1/16	1 1/2	5.95
5/16	5/16	1/2	2 17/32	1 7/8	1 1/16	3/32	1 13/16	11.24
11/32	13/32	11/16	2 7/8	2 1/8	1 1/32	3/32	2 1/8	20.1
7/16	15/32	23/32	3 9/32	2 3/8	1 1/4	1/8	2 3/8	30.6
1/2	17/32	27/32	3 5/8	2 3/4	1 1/2	5/32	2 3/4	43.9
9/16	19/32	29/32	3 5/8	2 3/4	1 1/2	5/32	2 11/16	45.2
5/8	21/32	31/32	4 1/16	3 9/32	1 23/32	5/32	3 1/16	66
3/4	25/32	1 1/4	5	3 3/4	2	1/4	3 13/16	134
7/8	15/16	1 13/32	5 1/2	4 1/4	2 1/4	1/4	4 1/4	177
31/32	1 1/16	1 17/32	6 5/32	4 1/2	2 15/32	1/4	4 29/32	240
1 3/32 - 1 1/4	1 11/32	1 13/16	7	5 1/8	2 7/8	1/4	5 13/16	324
1 1/4 - 1 3/8	1 13/32	2 7/32	8 31/32	6 1/2	3 1/2	13/32	6 13/16	807
1 3/8 - 1 1/2	1 17/32	2 15/32	8 31/32	6 7/32	3 1/2	15/32	7 1/8	1054
1 5/8	1 21/32	2 19/32	11 7/32	8	3 31/32	15/32	8 1/8	1612
1 25/32	1 25/32	2 23/32	12 5/32	8 31/32	4 1/2	15/32	8 1/2	1715
1 7/8 - 2	2 1/8	3 1/16	14 31/32	12	5 31/32	15/32	9 27/32	2535
2 1/4	2 3/8	3 5/8	17 1/8	14 1/32	7	5/8	11 27/32	4266
2 17/32	2 3/4	4 11/32	18 5/16	14 3/16	7	25/32	12 7/32	5820
3	3 11/32	4 29/32	21 21/32	16 5/32	7 3/32	25/32	13	8488

C

Thimbles

Pennant line type

- **Material:** mild steel
- **Finish:** hot dipped galvanized produced with a welded fillet plate
- **Certification:** 2.1 CE IIB

G-6151

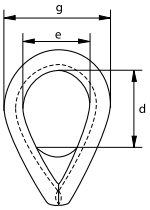

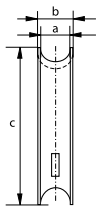

diameter wire rope	width groove	width overall	length	length inside	width inside	width	weight each
inch	a inch	b inch	c inch	d inch	e inch	g inch	lbs
5/8	21/32	7/8	4 1/32	1 31/32	1 31/32	2 15/16	0.88
23/32	3/4	31/32	4 1/2	1 31/32	2 3/32	3 11/32	1.1
25/32	13/16	1 5/32	5	2 3/8	2 3/8	3 15/16	1.76
7/8	29/32	1 5/16	5 1/2	2 3/8	2 9/16	4 11/32	1.98
15/16	31/32	1 11/32	5 31/32	2 3/4	2 3/4	4 17/32	2.2
1 3/32	1 3/16	1 1/2	7	2 15/16	3 5/32	5 5/16	3.75
1 3/16	1 5/16	1 23/32	8	3 5/32	3 15/16	6 3/32	5.51
1 13/32	1 1/2	1 15/16	9 1/32	4 11/32	4 17/32	6 7/8	8.82
1 9/16	1 5/8	2 1/16	10	4 23/32	4 23/32	7 15/32	9.92
1 23/32	1 13/16	2 3/8	10 31/32	4 23/32	5 1/8	8 9/32	15.43
1 31/32	2 1/16	2 9/16	12	5 1/2	5 23/32	9 21/32	18.3
2 7/32	2 3/8	2 27/32	14 1/32	6 3/32	6 3/32	10 1/4	27.6
2 17/32	2 3/4	3 5/16	17	7 7/8	7 15/32	12 7/32	43
3	3 3/16	4 11/16	19 1/32	9 1/4	9 1/16	13 25/32	64
3 7/32	3 5/8	5 1/8	22	9 7/16	10 1/32	15 9/16	77
3 17/32	4 1/8	5 23/32	24 1/32	10 13/16	11 1/32	16 15/16	93
4 23/32	4 23/32	6 3/32	25 31/32	11 5/8	11 7/32	17 23/32	128

C

Thimbles

Tubular type

P-6190

- **Material:** mild steel
- **Finish:** painted
- **Certification:** 2.1 CE IIB

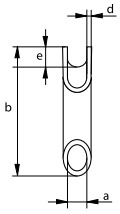

diameter wire rope	diameter	length	width inside	thickness	height	weight each
inch	a inch	b inch	c inch	d inch	e inch	lbs
13/32	15/32	3 17/32	29/32	5/32	5/16	0.51
15/32	19/32	4 1/8	1 1/16	3/16	13/32	0.88
9/16	21/32	4 17/32	1 1/16	3/16	13/32	1.1
5/8	3/4	4 23/32	1 1/4	3/16	15/32	1.32
23/32	7/8	5 1/2	1 3/8	3/16	19/32	1.65
7/8	31/32	7 3/32	1 25/32	1/4	5/8	3.09
15/16	1 3/32	7 3/32	1 25/32	9/32	5/8	3.86
1 1/32	1 3/16	7 11/16	1 27/32	9/32	23/32	4.41
1 1/4	1 3/8	8 15/32	2 3/8	9/32	7/8	5.51
1 1/2	1 25/32	10 1/4	2 3/4	9/32	1 1/16	7.72
1 23/32	1 31/32	11 1/32	2 15/16	9/32	1 3/32	9.26

C

Thimbles

Tubular type with welded plate

P-6195

- **Material:** mild steel
- **Finish:** painted
- **Certification:** 2.1 CE IIB

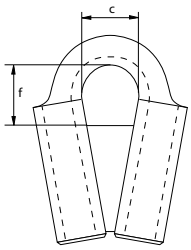

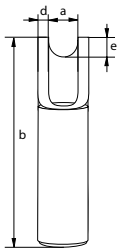

diameter wire rope	width groove	length	width inside	thickness	height	length inside	weight each
inch	a inch	b inch	c inch	d inch	e inch	f inch	lbs
13/32	15/32	3 5/16	29/32	5/32	5/16	15/16	0.57
15/32	19/32	3 3/4	1 1/16	3/16	13/32	1 7/32	0.93
9/16	21/32	3 15/16	1 1/16	3/16	13/32	1 1/2	1.06
5/8	3/4	4 13/32	1 1/4	3/16	15/32	1 13/16	1.34
23/32	7/8	4 29/32	1 3/8	3/16	19/32	1 27/32	2.09
7/8	31/32	5 29/32	1 25/32	1/4	5/8	2 13/32	2.93
15/16	1 3/32	6 3/16	1 25/32	9/32	5/8	2 7/32	3.68
1 1/32	1 3/16	6 11/16	1 27/32	9/32	23/32	2 11/16	4.32
1 1/4	1 3/8	7 15/32	2 3/8	9/32	7/8	2 7/8	5.36
1 13/32	1 9/16	8 11/32	2 3/4	11/32	1 1/32	3 5/32	9.52
1 1/2	1 25/32	8 31/32	2 3/4	9/32	1 1/16	3 11/16	8.09

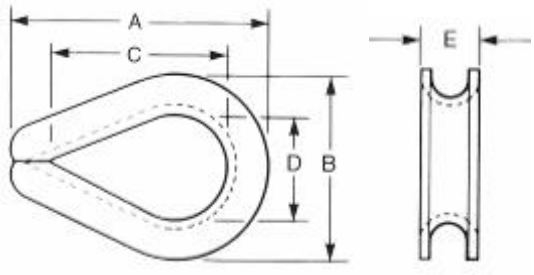

GALVANIZED HEAVY DUTY WIRE ROPE THIMBLES

Size in Inches	Approx. Weight Each in Pounds	Dimensions in Inches				
		A	B	C	D	E
1/4	0.075	2.19	1.50	1.63	0.88	0.41
5/16	0.140	2.50	1.81	1.88	1.06	0.50
3/8	0.250	2.88	2.13	2.13	1.13	0.66
7/16	0.360	3.25	2.25	2.38	1.25	0.75
1/2-9/16	0.510	3.63	2.56	2.75	1.50	0.84
5/8	0.750	4.25	3.00	3.25	1.75	1.00
3/4	1.470	5.00	3.50	3.75	2.00	1.25
7/8	1.850	5.50	4.00	4.25	2.25	1.38
1	3.000	6.13	4.38	4.50	2.50	1.56
1.1/8-1.1/4	3.800	7.00	5.63	5.13	2.88	1.88
1.1/4-1.3/8	8.600	9.06	6.75	6.50	3.50	2.25
1.3/8-1.1/2	11.000	9.06	7.00	6.50	3.50	2.63
1.5/8	11.800	11.25	8.13	8.00	4.00	2.72
1.3/4	17.900	12.19	8.25	9.00	4.50	2.88
1.7/8-2	25.000	15.13	10.25	12.00	6.00	3.13
2.1/4	45.000	17.13	11.88	14.00	7.00	3.63
2.1/2*	63.500	22.25	12.75	17.50	8.00	4.38

*2.1/2" available with or without gusset plates.
Hot dip galvanized. Meets the performance requirements of Federal Specification FF-T-276, current revision, Type III.

WARNING: NEVER EXCEED WORKING LOAD LIMIT
Read important warnings and information on pages 2 - 9 and page 33.

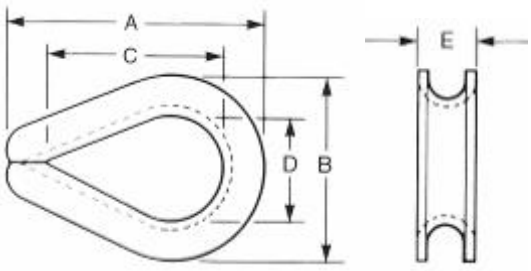

STAINLESS HEAVY DUTY WIRE ROPE THIMBLES

Size in Inches	Approx. Weight Each in Pounds	Dimensions in Inches				
		A	B	C	D	E
1/8 **	0.020	1.88	1.06	1.25	0.69	0.16
3/16 ***	0.023	1.79	1.30	1.30	0.76	0.21
1/4	0.080	2.19	1.50	1.63	0.88	0.44
5/16	0.100	2.50	1.88	1.88	1.13	0.50
3/8	0.250	2.88	2.09	2.12	1.13	0.66
1/2	0.450	3.63	2.63	2.75	1.50	0.88
5/8	0.680	4.25	3.09	3.25	1.75	1.00
3/4	1.200	5.00	3.50	3.75	2.00	1.25
7/8	1.850	5.66	4.19	4.31	2.25	1.50
1	2.200	6.13	4.63	5.00	2.50	1.56
1.1/8-1.1/4	3.800	7.13	5.33	5.38	2.88	1.88
1.1/4-1.3/8	8.600	8.38	6.67	6.50	3.50	2.25

TYPE 304 and 316 available unless otherwise noted.
**1/8" available in REGULAR style and TYPE 304 only.
***3/16” T304 are HEAVY DUTY, T316 are REGULAR style.

WARNING: NEVER EXCEED WORKING LOAD LIMIT
Read important warnings and information on pages 2 - 9 and page 33.

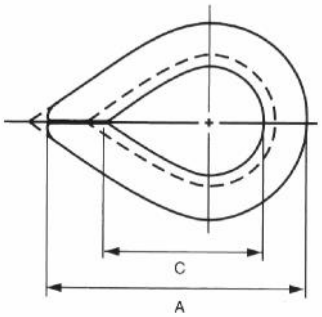

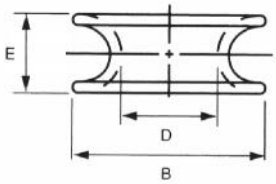

REGULAR WIRE ROPE THIMBLES - GALVANIZED

Size in Inches	Approx. Weight Each in Pounds	Dimensions in Inches				
		A	B	C	D	E
1/8	0.020	1.88	1.06	1.25	0.69	0.30
3/16	0.023	1.88	1.06	1.25	0.69	0.39
1/4	0.050	1.94	1.06	1.31	0.69	0.41
5/16	0.054	2.13	1.25	1.50	0.81	0.46
3/8	0.062	2.38	1.47	1.63	0.94	0.57
1/2	0.130	2.75	1.75	1.88	1.13	0.72
5/8	0.220	3.50	2.38	2.25	1.38	0.94
3/4	0.500	3.75	2.69	2.50	1.63	1.12
7/8	0.850	5.00	3.19	3.50	1.88	1.32
1	1.000	5.69	3.75	4.25	2.50	1.38
1.1/8-1.1/4	1.750	6.25	4.31	4.50	2.75	1.75

Meets the performance requirements of Federal Specification FF-T-276, current revision, Type II.

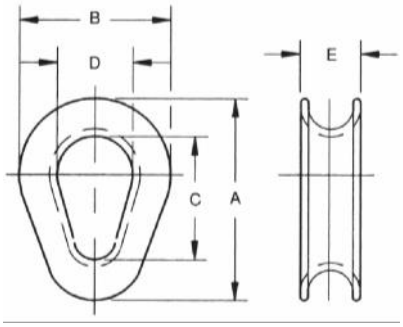

HAWSER THIMBLES

Size in Inches	Approx. Weight Each in Pounds	Dimensions in Inches				
		A	B	C	D	E
5/8 - 3/4	3.5	6.7/8	4.1/2	5	3	1.3/16
7/8 - 1	5.5	8.5/8	5.3/4	6.1/4	3.3/4	1.7/16
1.1/8 - 1.1/4	10.5	10	6.5/8	7.1/8	4.3/16	1.11/16
1.3/8 - 1.1/2	18.0	12.1/8	8	8.3/4	5	2.3/16
1.5/8 - 1.3/4	23.5	12.3/4	8	9.1/4	5	2.7/16
1.7/8 - 2	32.5	14.3/4	9.1/2	10.3/4	6	2.11/16
2.1/8 - 2.1/4	51.0	17.1/8	11	12.1/2	7	3.1/8
2.3/8 - 2.1/2	80.0	19.1/4	12.3/4	14.1/4	8.1/4	3.7/8
2.3/4 - 3	135.0	24.1/2	17	15	9.3/8	4.15/16

Hot galvanized, Cast Alloy Steel

WARNING: NEVER EXCEED WORKING LOAD LIMIT
Read important warnings and information on pages 2 - 9 and page 33.

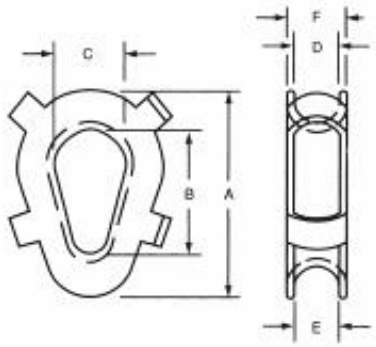

SYNTHETIC ROPE THIMBLES

Size Rope Diameter in Inches	Rope Circumference in Inches	Approx. Wt. Each in Pounds	Dimensions in Inches					
			A	B	C	D	E	F
2 - 2.1/4	6-7	10	9.25	6.00	3.85	2.75	2.75	3.39
2.1/2 - 2.5/8	8	18	11.00	6.50	4.25	3.00	3.12	3.75
3	9	23	12.00	7.63	4.75	3.25	3.50	4.00
3.1/4	10	29	13.50	8.50	5.00	3.50	3.88	4.25
3.3/8 - 4	11-12	43	15.50	9.50	6.00	4.50	5.38	5.50
4.1/4 - 4.5/8	13-14	52	17.00	10.00	6.13	5.25	5.75	6.00
5 - 5.1/4	15-16	68	18.50	11.00	6.44	5.75	6.50	6.63
5.1/2 - 6	17-18	100	20.12	13.12	9.00	6.09	6.09	7.00

Hot Galvanized or Hot Galvanized and Painted.

WARNING: NEVER EXCEED WORKING LOAD LIMIT
Read important warnings and information on pages 2 - 9 and page 33.